Journal of Soil, Environment & Agroecology

Journal homepage:
https://karyailham.com.my/index.php/sea/index
ISSN: 3030-5497



Enhancing Peat Soil Embankment Stability through Air-Tube Technology

Faizah Md Talib[1], Habib Musa Mohamad[1,*], Mohd Syeddre Sutarno[1], Adnan Zainorabidin[2], Sajiharjo Marto Suro[3]

[1] Faculty of Engineering, Universiti Malaysia Sabah, Jalan UMS, 88400 Kota Kinabalu, Sabah, Malaysia
[2] Faculty of Civil Engineering and Built Environment, Universiti Tun Hussein Onn Malaysia, 86400 Parit Raja, Batu Pahat, Johor, Malaysia
[3] Institut Teknologi PLN, Jl. Rajawali no. 14, RT 01 / RW 04, Beji, Depok-16421, Jawa Barat, Indonesia

ARTICLE INFO

Article history:
Received 24 December 2024
Received in revised form 8 February 2025
Accepted 14 February 2025
Available online 15 March 2025

Keywords:
Peat soil; embankment design; settlement behavior; air-tube system

ABSTRACT

This study examines the challenges and opportunities in addressing peat soil issues in road and building construction, focusing on Sabah, Malaysia, particularly the Klias region. Peat soil in this area is characterized by extreme moisture content (687.03%), high organic matter (98.94%), and significant fiber content (66.41%). These properties result in high compressibility, low shear strength, and limited load capacity, presenting unique geotechnical challenges. The research explores the use of a pipe grid system with compressed air to improve peat soil performance. This system leverages buoyancy principles, where PVC pipes, mimicking bamboo's air-trapping cavities, are arranged in a grid to distribute soil and structural loads. The study hypothesizes that this approach reduces soil compaction and enhances load-bearing capacity. Experimental results validate the system's effectiveness. On the second day, the pipe grid reduced settlement by 77% and vertical pressure by 76% compared to unreinforced soil. By the seventh day, settlement and vertical pressure reductions were 43% and 42%, respectively. These findings demonstrate the system's potential to improve embankment performance on peat soil. However, the study notes that factors such as soil properties, environmental conditions, and load characteristics influence performance, warranting further investigation. This research contributes to geotechnical engineering by offering a practical solution for construction on challenging peat soils, with implications for future studies and real-world applications.

1. Introduction

The development of infrastructure on peatland presents a unique set of challenges, particularly in regions such as Sabah and Sarawak, where the Pan-Borneo Highway is being constructed. This project, funded by billions in federal funds, traverses some of the most challenging terrains on Earth, including areas of problematic peat and soft soil.

The 11th Malaysian Plan's 4th Strategic Thrust emphasizes the pursuit of green growth for sustainability and resilience. In line with this aspiration, this research aims to conduct a comprehensive investigation into the design, construction, and future operation of infrastructure in

* *Corresponding author.*
E-mail address: habibmusa@ums.edu.my

https://doi.org/10.37934/sea.4.1.1131a

the peatland. The primary dilemma lies in the infrastructural development over soft ground. The implementation of new methods to support heavy engineering construction over soft clay and/or peat economically and soundly is expected to garner significant attention. While numerous ground improvement methods have been proposed and attempted for constructing heavy engineering structures on soft to incredibly soft ground, they often come with their practical limitations due to the sophistication of the methods and the associated costs.

This thesis will explore these existing methods, their limitations, and the potential for new solutions to emerge in the future. The goal is to contribute to the body of knowledge that can guide future infrastructure projects on peatland, ensuring they are economically viable, environmentally sustainable, and resilient to the unique challenges presented by these landscapes.

Peat, a major soil group in Malaysia, plays a vital role in the nation's ecosystem. Covering approximately 8% of the country's total land area, or about 2,457,730 hectares, peat soils are a significant feature of the Malaysian landscape [1]. Sarawak boasts the largest expanse of peat soils, with a total of 1,697,847 hectares. These areas, rich in organic material, significantly contribute to the region's biodiversity. Following Sarawak, all of Peninsular Malaysia contains 642,918 hectares of peatland. These ecologically sensitive regions require careful management to balance development and conservation. Even though its peatland area is relatively small, accounting for 116,965 hectares, Sabah still supports the second-largest peatland in the country. The Klias Peninsula and the Kinabatangan-Segama Valleys are the areas where the largest peat soil areas can be found in Sabah.

The Pan-Borneo Highway project covers a distance of 2,239km from Sematan, in Sarawak's Lundu division, to Serudong in Tawau district, Sabah. The project is ongoing to develop and upgrade the current 2-lane single carriageway which connects the entire state into a 4-lane dual carriageway. Regarding this project, it's proven that it is a challenging task and difficult for civil engineers to handle construction on peat soils since this soft soil has covered a developed area. For engineers, the primary conditions are stability and allowable settlement in terms of serviceability limits both as a function of time. Other study reveals that many of the road embankments and culvert foundation failures are associated with geotechnical factors. Most of these failures are still repeating and quite identical/similar in that they are caused by failure to comply with one or a combination of the above factors [2].

Various construction techniques, particularly in road design, have been implemented to support embankments over peat deposits without risking bearing failures. However, the settlement of these embankments remains excessively large for many years. For instance, the static loading method, which considers soil shear strength through static load, has been applied in road design. However, this method does not account for vehicular dynamic loading and the subsequent shear strength. This issue is related to the shear strength of peat soil after being dynamically loaded.

In its natural state, peat consists of water and decomposed plant fragments, with virtually no measurable strength [3]. Generally, peat soil is considered soft due to its high settlement value, even under moderate loading conditions. In Malaysia, peat soils are mostly fibric and hemic, referring to the degree of decomposition of the organic material, with fibric being the least decomposed and hemic being moderately decomposed [4]. This can result in severe longitudinal cracking of pavements, leading to poor driving conditions. This is one of the road failures due to high natural moisture content, high compressibility, low bearing capacity, and medium to low permeability.

In the field of sustainable construction and soil improvement, understanding soil behaviour under load is of utmost importance. Peat soil, which is a type of soil formed from partially decayed vegetation, is known for its distinctive characteristics such as high natural water content, low pH, and low nutrient availability. Due to its high-water content, peat soil presents significant challenges for various activities such as construction, agriculture, and land development. In East Malaysia, the water

content in peat soil ranges from 200% to 2200% which is exceptionally high and can pose a risk of soil instability and flooding [5]. This high-water content is mainly attributed to the region's high rainfall and poor drainage conditions. As a result, peat soil requires special management techniques to ensure its sustainable use while also reducing environmental impacts. Meanwhile, Johor Hemic peats exhibit moisture levels between 230% and 500%, and Sabah records up to 800% water content [6]. Extreme weather conditions are often known to cause road and embankment subsidence.

To address this issue, our research proposes an innovative approach which is customized floating road construction inspired by buoyancy principles. By stimulating and harnessing the upward forces exerted by water, we aim to enhance stability and mitigate settlement impacts. Buoyancy force and stability is the buoyancy force, also known as upthrust, which opposes the weight of an object submerged in a fluid (in this case, water. This concept takes inspiration from the stability of floating vessels. To achieve stability, the upward force from water should be greater than the downward forces acting on the system. To achieve this, the construction of the floating road is customized by installing a grid of tubes made from PVC beneath the embankment, allowing for controlled buoyancy. These tubes are filled with lighter gases, such as compressed air, which reduces the effective weight of the embankment. As a result, the embankment is able to "float" on the water-saturated peat soil. When water exerts upward pressure, the embankment experiences lift, which counteracts settlement. This statement is in line with the concept of the balance of couples of forces or moments of water, associated with the basic law of buoyancy and eventually floatability [7].

In summary, this research innovative method leverages buoyancy forces to create stability in peat soil. By lifting the embankment using lighter gases, this research mitigates settlement issues and pave the way for sustainable road construction. Road construction over peat areas, such as the Pan-Borneo Highway in Sabah and Sarawak, presents significant technical challenges. Peat soil has unique properties such as high-water content, decomposed plant fragments, lower pH, and the potential to interfere chemically and biologically with time and environmental conditions. These characteristics lead to long-term consolidation settlements even under moderate loads, making it difficult to stabilize peat and ensure the stability of the embankment.

Despite the implementation of various construction techniques, including the floating road concept, the settlement of embankments over peat deposits remains excessively large for many years. This research aims to address this issue by exploring an innovative approach to road construction on peat soil.

The proposed method leverages the buoyancy force of water and utilizes Polyvinyl chloride (PVC) tubes, designed as a grid and filled with compressed air, to maintain stability and minimize the effects of settlement. This method, inspired by the buoyancy force observed in bamboo due to its hollow structure and trapped air, hypothesizes that a similar buoyancy generation can be achieved given the high-water content and quasi-solid properties of peat. By combining these concepts and principles, this study will introduce a system of floating roads using PVC tubes installed beneath the embankment. The ultimate goal is to develop a more effective and sustainable method for constructing roads over peat areas, thereby improving the safety, longevity, and cost-effectiveness of these critical infrastructures.

The goal is to develop a more effective and sustainable method for constructing roads over peat areas, thereby improving the safety, longevity, and cost-effectiveness of these critical infrastructures. This thesis aims to investigate and develop an innovative approach to road construction on peat soil that can provide a more effective solution to the challenges of road construction on peat soil, contributing to the sustainable development of infrastructure in regions with large peat deposits. This research aims to develop a greener, more sustainable soil improvement method that eliminates the need to remove and replace existing peat soil. To achieve this, the study focuses on three key

objectives: examining the index properties of Sabah's peat soil, investigating the settlement behavior of peat soil reinforced with air-tube physical modeling, and analyzing the stress distribution within the peat soil embankment structure.

This study focuses on developing a stable and sustainable embankment design by investigating the behavior of peat soil through field and laboratory testing. Peat samples will be collected from the hemic deposit area at the Klias Peat Swamp Field Centre (KPSFC) in Beaufort, Sabah. The research involves characterizing peat soil using the Von Post scale and profiling peat strata to determine depth, alongside conducting classification tests for index properties. Laboratory-scale physical modeling will simulate road embankments on peat foundations to better understand soil behavior under varying loads. A soil box model made from 12mm Perspex will be developed to test the workability of a PVC grid pipe system. The study will measure settlement and soil movement parameters using a dial gauge indicator, with discharge loads ranging from 0 to 9 psi. Additionally, the effects of air-compressed injection beneath the embankment to counteract upward forces will be explored. Advanced techniques like X-ray computed tomography and scanning electron microscopy (SEM) will be used to analyze peat fiber properties, providing comprehensive insights into peat soil behavior and embankment design.

The significance of this study lies in its potential to enhance efficiency in design and construction processes by streamlining the analysis of the pipe grid and air tube application systems. It also aims to demonstrate the practical utility of the air tube system in addressing real-world civil engineering challenges. Additionally, the study's findings will contribute to the academic knowledge base in civil engineering, providing valuable insights for future research and serving as a foundation for further advancements in the field.

2. Methodology

2.1 Design Process

Figure 1 illustrates the methodology flowchart for this study. This research is divided into three main categories namely index properties, observation of peat soil characteristics and finite element modelling. Field investigations begin with characterizing of post soil using the Von Post scale and profiling peat strata. Soil modelling is designed to stimulate the workability of the design purpose by monitoring the behaviour of pre- and post-settlements. In this part, typical knowledge is designed, to analyse and evaluate that material using appropriate criteria.

A subsequence of critical review has finally been proposed for the soil sampling method. Locations stated in Klias, Beaufort. It has been demonstrated that the aforementioned areas have significant peat soil deposits. A sampling technique adapted from BS1377-2:1990 will be used to collect soil samples at three different locations. Consequently, disturbed, and undisturbed samples were gathered. samples moved from the field to the lab in UMS, Sabah. The proper sample storage needs to be addressed. The sample decided that three breakdowns of testing, index properties, and static Characteristics were necessary. The soil will be extracted, and index properties with common tests will be used to determine the particle size distribution, level of decomposition, specific gravity, moisture content, loss of ignition, Atterberg limit, fibre content, and pH test.

Laboratory-scale physical modelling of peat soil involves simulating the behaviour of road embankments on peat foundations in controlled laboratory conditions. The purpose of this type of modelling is to gain a better understanding of how peat soil behaves under different loading conditions, such as changes in moisture content, settlement, or shearing. By injecting compressed air to support the grid pipe beneath an embankment from a significant settlement, a soil box model was created to simulate the workability of the grid pipe. This model used Perspex sheet material with 12

mm thickness. A box model with an ideal size is designed for this purpose. Peat soil was filled in the box and the PVC grid tube was air injected and placed on top before backfilled with clay soil as embankment. Two data items are considered in this study: the settlement comparison between the embankment with the grid pipe installed and the embankment without the grid pipe installed. The variations in settlement and soil movement parameters were measured using a dial gauge indicator. The discharged load will be a typical compressible gas design at 0 psi, 3 psi, 5 psi, 7 psi, and 9 psi.

Upon the tests have been done, results and data extracting, and critical analysis will lead to deriving the findings and conclusion of this study. The method is undergoing rapid development and study, particularly regarding its applicability it's become primarily a concern in this study.

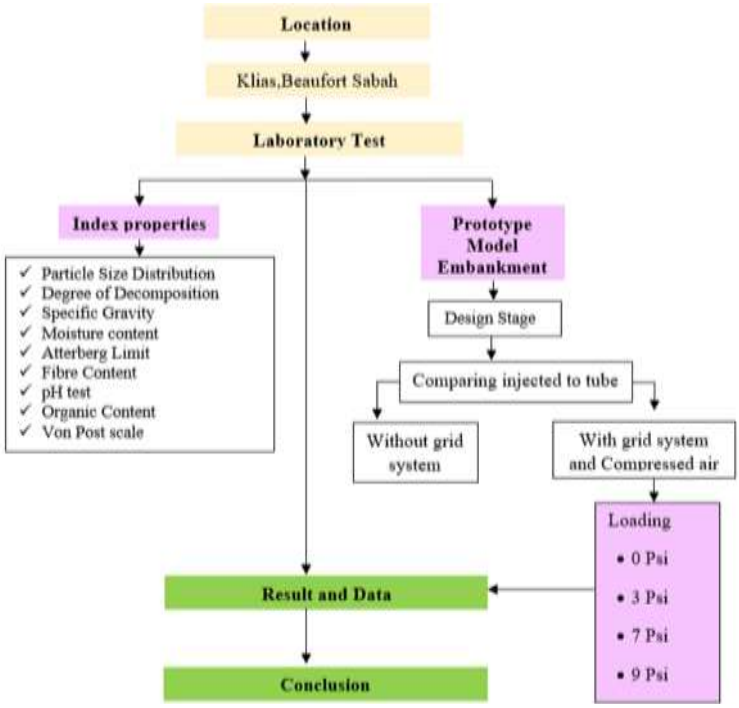

Fig. 1. Methodology flowchart

For research purposes, a Site visit was made to Klias Peat Swam, Beaufort district. It is important to assess the conditions of formation and general information about peat soil and collect the specimen for laboratory tests. Site exploration and soil sampling for peat involve a systematic process of investigating the peatland area to gather information about the soil characteristics and properties. The regional geology, hydrology, and vegetation patterns were understood using the data from site investigations. Additionally, it offers important details regarding the soil's physical characteristics, such as colour, texture, profile, and groundwater quality. The analysis of the physical characteristics of peat soil has greatly benefited from the information that this prominent site at Klias Peat Swamp has provided. The most crucial stage of the soil testing and amendment programme is correctly collecting soil samples. A sufficient number of peat soil samples were gathered for laboratory testing. The soil testing amendment programme's most crucial step is correctly collecting soil samples. To stop moisture from escaping, the sample was placed in polyethene bags and securely tied. Using a hoe, the sample was disturbed and taken.

Apart from that, the disturbed sample had been collected for the purpose of characterization of peat and description of peat. The soil will be excavated 1.0 m from ground level and placed in a heavy-duty box wrapped in plastic. Visual observation on the peat soil will lead as mentioned according to the Von Post classification system. The sample for an undisturbed sample was taken from three

different depths. The collected undisturbed sample is intended to be analysed to identify, among other geotechnical characteristics, fracture patterns, permeability, strength, and compressibility. 1 m, 2 m, and 3 m are the three different sampling depths, respectively as shown in Figure 2. Figure 3 illustrates the peat sampling site located in Klias, Beaufort, Sabah. This site was selected due to its representative peat soil characteristics, providing a suitable environment for field investigations and sample collection for the study.



(a) Peat sampling process

(b) The soil is placed into a plastic bag to ensure that the moisture content is preserved

Fig. 2. Peat sampling in Klias, Beaufort, Sabah

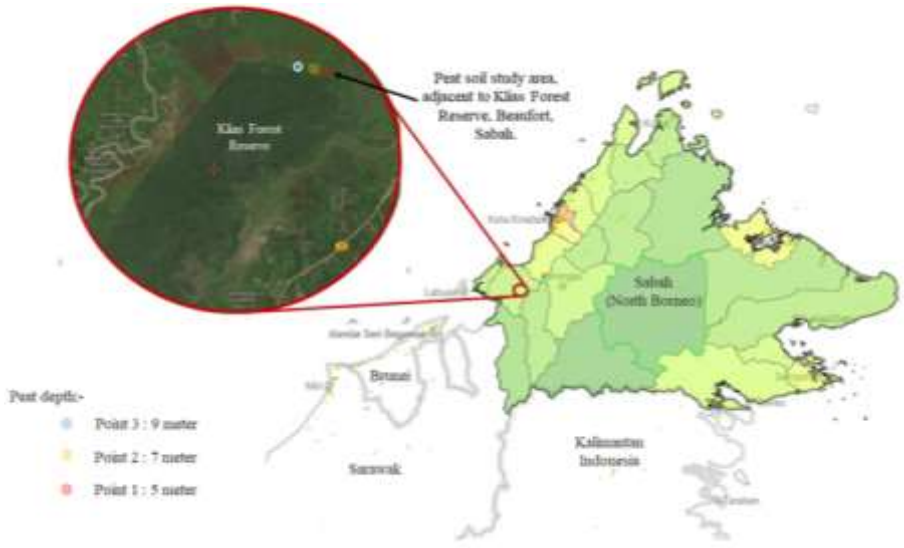

Fig. 3. Peat sampling site in Klias, Beaufort, Sabah

The research methodology for testing soil or material properties involves a series of standardized tests to determine various physical, chemical, and mechanical characteristics. The materials are carefully collected and prepared for analysis, ensuring that samples are representative and properly conditioned. The Particle Size Distribution test follows BS 1377-2:1990, where the sample is sieved

through a series of progressively smaller sieves, and the mass retained on each sieve is recorded. For Degree of Decomposition, the sample is analyzed according to BS 1377-3:1990, using microscopy or chemical techniques to assess the level of organic material decomposition. Specific gravity is determined using the pycnometer or displacement method per BS 1377-2:1990. Moisture content is measured by drying the sample in an oven at 105-110°C until a constant weight is achieved, following BS 1377-2:1990. The Atterberg Limits, including the liquid limit and plastic limit, are determined using the Casagrande apparatus and the rolling thread method, as per BS 1377-2:1990. Fibre content is measured through manual or mechanical sieving methods, as outlined in BS 1377-3:1990. The pH test, performed according to BS 1377-3:1990, uses a pH meter on a slurry of soil and distilled water. Organic content is analyzed by the loss on ignition method, where the sample is heated to a high temperature, and the weight loss is attributed to organic matter, also following BS 1377-3:1990. The Von Post scale, used to assess the degree of decomposition of organic material, is evaluated visually against a standardized scale ranging from 0 to 10.

All tests are conducted using calibrated instruments and appropriate safety measures, with repeated trials to ensure reliability. The data collected is analyzed statistically, with results interpreted according to relevant soil classification standards. The overall methodology ensures accurate, reproducible, and standardized results, facilitating the determination of the material's suitability for various applications in construction, agriculture, or other related fields. to understand the operating mechanisms of the embankment in fields, the prototype of laboratory-scale modelling was conducted. The use of the laboratory-scale physical model test is relatively cheaper compared construction full-scale field embankment, it is better to understand the actual behaviour of the equipment and procedures relating to the model preparation, instrumentation, installation, and system calibration of embankment with pipe grid tube also compressed air tube are discussed. The prediction of settlement and displacement is monitored. Details of additional supplementary laboratory tests that complement the main experiments are also included.

In the UMS laboratory, a box model was developed to represent an embankment situated on peat ground. The model was housed in a rigid box with dimensions of 120cm (length), 90cm (width), and 90cm (height). The chamber of the model was fabricated from 12mm thick rigid Acrylic Perspex, a material chosen for its ability to enable real-time tracking of soil movement beneath the embankment during the model's consolidation process. The primary objective of this physical model study was to gain a foundational understanding of the behaviour and stress responses of peat soil when subjected to loading. Each steel frame made from metal compartment, referred to as an Angle bar, was designed with precision using Prokon software, a tool typically used for structural analysis. Prokon's ability to assist in the design of steel metal compartments, such as Angle bars, is noteworthy. This ensures the safety of the selected size of the angle bar during soil loading, even when the soil is in a saturated state and the load of the Perspex acrylic is factored in. To prevent any lateral movement during the consolidation of the model ground and the loading of the embankment, all sides were securely fastened using angle steel and bolts. Both compartments are used for water level control. Sand is used to control the air capacity in peat soil.

Figure 4 presents the physical model for the air-tube embankment design, showcasing the structure and key components of the system. In contrast, Figure 5 illustrates the setup of the chamber/container, providing a detailed view of the arrangement and configuration of the testing environment, as depicted by the author.

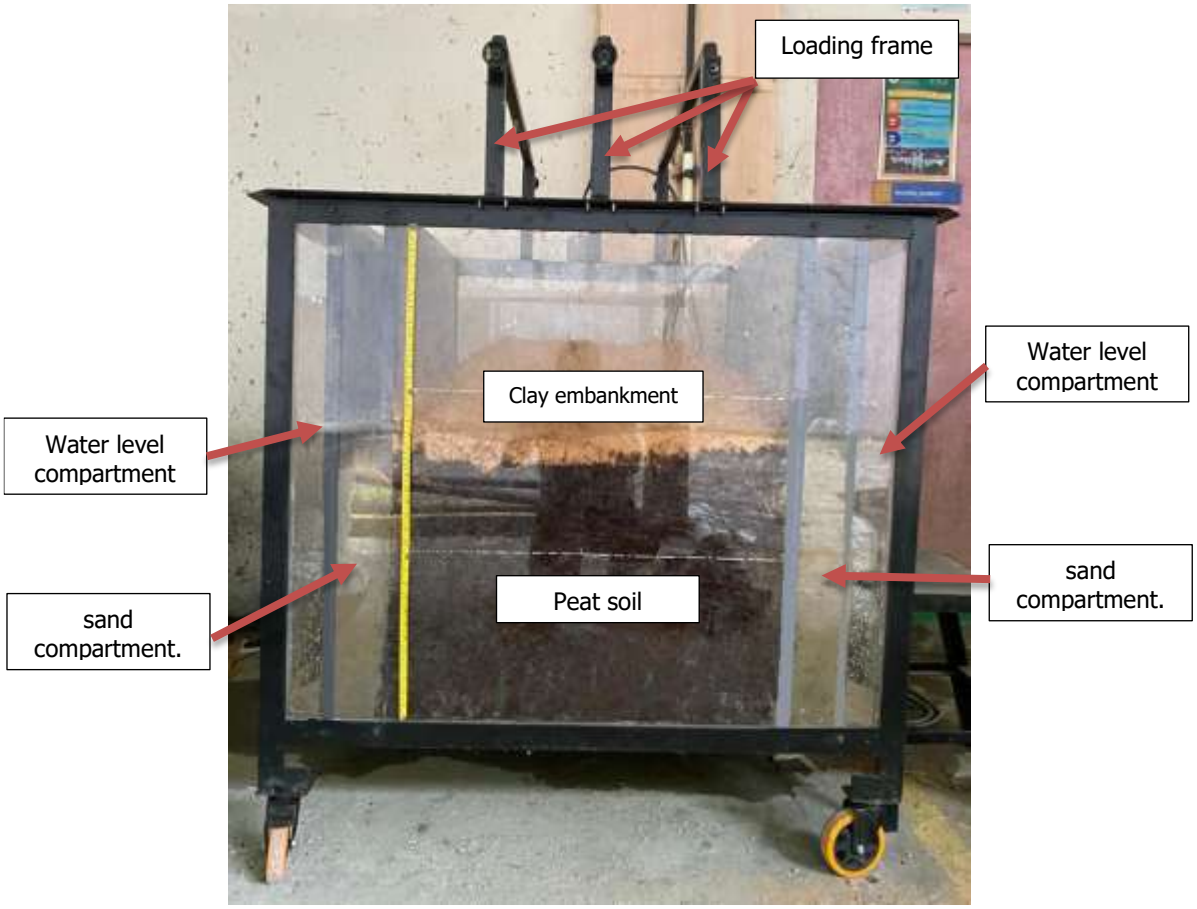

Fig. 4. Physical model for air-tube embankment design

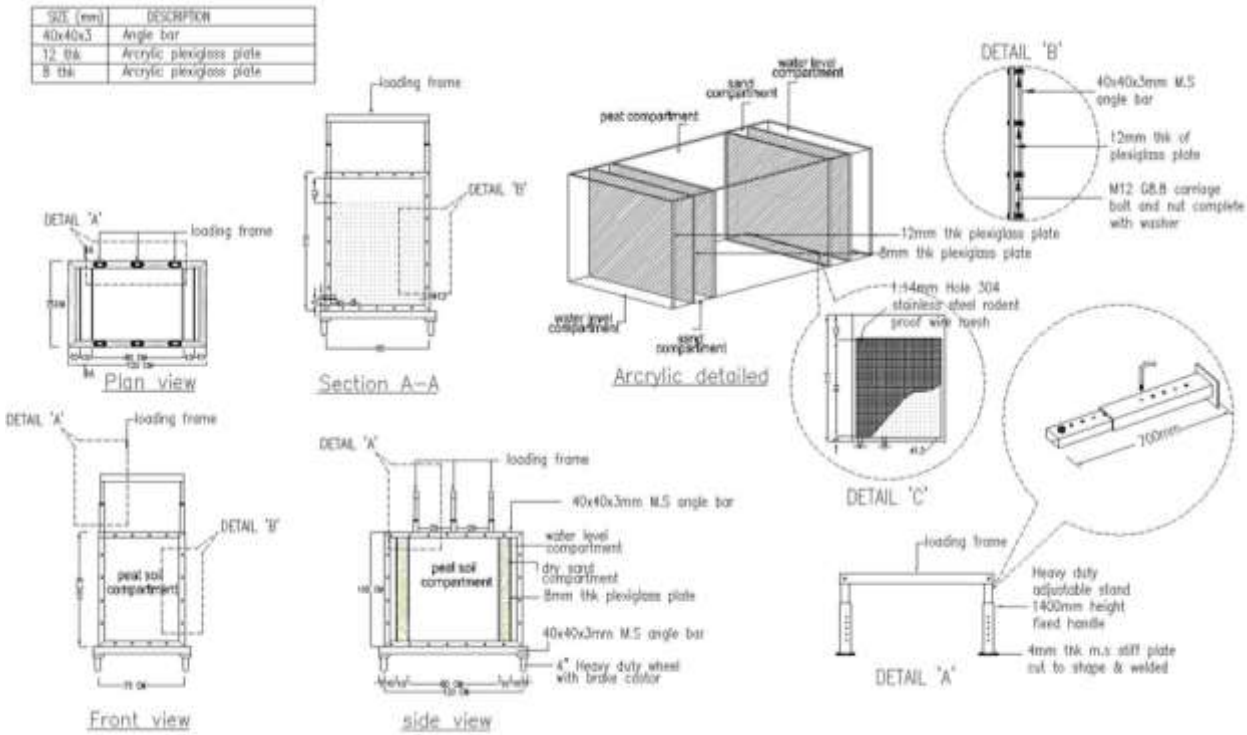

Fig. 5. The illustration for setup the chamber/container (illustrated by author)

2.2 Model of Grid Pipe System

In pursuit of the second goal of this study, which is to examine the settlement behaviors of peat soil using air tube physical modelling, the researcher proposed a novel concept of a floating road. This concept is particularly useful when dealing with peat soil, characterized by its high moisture content, low strength, and sponge-like texture.

The design process begins with a thorough understanding of the problem at hand: the high compressibility and moisture content of peat soil. The grid pipe system is designed to mimic the grid-like structure of bamboo mats. This concept is derived from previous research, which has demonstrated that such a structure can effectively distribute load and reduce settlement in peat soil. The design process involves determining the optimal size and arrangement of the pipes to ensure maximum load distribution and buoyancy. The grid pipe System consists of 2 combination techniques i.e. the raft and geotextile. The pipe grid system is designed as an integrated system of pipes installed in a grid series to withstand the loads, and enhance stability, bearing capacity and foundation capability in peat soil conditions. The typical arrangement of the pipe grid system is shown in Figure 6. The construction process begins with the assembly of Unplasticized Polyvinyl Chloride (UPVC) pipes, which are meticulously arranged into a grid-like pattern. The choice of UPVC pipes is strategic, considering their lightweight nature, durability, and the presence of cavities. These cavities are particularly important as they can trap air, thereby enhancing the buoyancy of the system, a critical factor in the functionality of the grid system.

The assembly process involves interconnecting the pipes using suitable fittings. This step is crucial to ensure the stability and integrity of the grid system, as it forms the backbone of the structure and determines its resilience under various load conditions. Before the pipe grid is used as reinforcement in the construction process, it undergoes a rigorous testing phase. This involves submerging the grid in a water pool. The purpose of this test is to ensure that the pipe grid does not have any leaks. Any leaks in the system could potentially compromise the integrity of the grid system.

The presence of leaks might lead to a reduction in the impact of the buoyancy force. This force is instrumental in lifting the pipe grid, enabling it to withstand load distribution effectively. A well-functioning buoyancy system can significantly reduce settlement, improving the overall performance and longevity of the construction. Therefore, the construction process, choice of materials, assembly, testing, and understanding the impact of the buoyancy force are all critical components in the effective use of a UPVC pipe grid system in construction. Each step is carefully executed to ensure the highest standards of quality and performance.

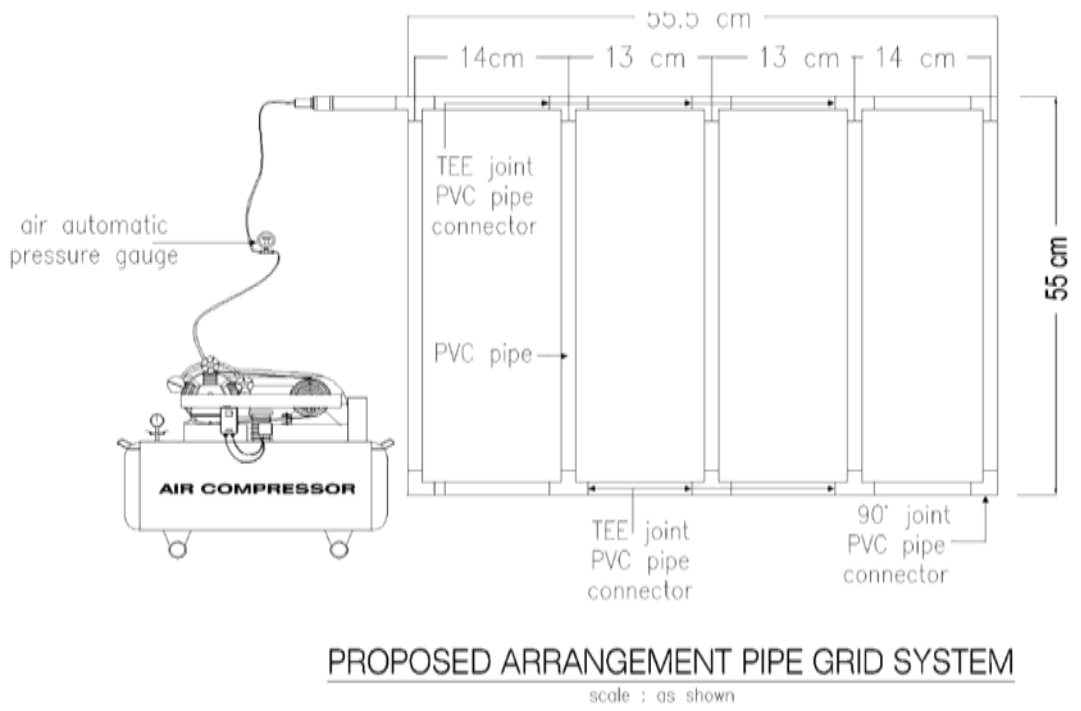

Fig. 6. Proposed arrangement pipe grid system

Once constructed, the model is carefully placed beneath the model embankment. This step requires precision to ensure that the model is properly positioned and secured. The placement of the model is crucial to accurately simulate the conditions of a real-world application. Before the installation of the grid pipe system and the backfill, a geotextile layer is applied both before and after the placement of the grid pipes. This geotextile layer serves as a separator and filter between the infill material and the soft soil layer. Additionally, it functions as a 'tension layer' within the grid pipe system, effectively reducing local stresses in the soft soils. Figure 6 illustrates the sequence of activities for the installation of the simulation model before testing is conducted. This sequence of activities is repeated for three conditions: without the use of the grid pipe, when the grid pipe is applied, and when the grid pipe is applied with compressed air introduced.

The model is subjected to a variety of loads to mimic real-world conditions. These loads could encompass the weight of the soil infill and any additional burdens such as traffic or structures. The loads are methodically applied, and the settlement of the embankment is documented at regular intervals. The simulation involves testing three distinct conditions. Initially, the soil embankment model is examined without any reinforcement. However, geotextile is positioned at the base of the embankment soil, and observations are recorded daily for a week. This procedure aims to segregate peat soil from clay soil. Subsequently, the soil is inspected using a pipe grid system, but without the introduction of any compressed air into the grid. This test is conducted over a week, with daily data collection. Finally, compressed air is injected into the empty cavity of the pipe grid system. Pressure variables are established at 3 psi, 5 psi, 7 psi, and 9 psi. The settlement for each of these four pressure settings is recorded daily over a week. Water is then introduced into the modeling tank. This serves to demonstrate the maximum limit of the water level, given that the moisture content is exceedingly high.

3. Results

3.1 Index Properties and Pressure Distribution

The degree of humification test is a laboratory method used to determine the level of decomposition or humification of organic matter, particularly in peat soils. It provides insights into the maturity and organic composition of the peat. Additionally, this test is conducted to support the theory that hemic peat is present in Sabah. The measurement technique and scale for Von Post are depicted in Figure 7, while Table 1 displays the outcomes of the peat soil analysis carried out in Klias.

A sample from 1.0 m depth was collected and measured for this purpose. To extract water from wet soil, use one hand and squeeze it tightly until water comes out through your fingers. The soil appears dark brown, and the fibre left on the palm has reduced to 60%. It releases muddy water and is slightly pasty. Referring to the Von Post scale, the samples scored H5 class and visually hemic peat type. Regarding Sabah peat soil, H4 until H7 was discovered in Lumadan area [8]. Compared to other places in Malaysia, Logan Bunut in Sarawak recorded an H2-H4 scale and classified as very deep peat that is quite humified in nature conditions [9]. In Sibu, Sarawak peat on the depth 1-1.5m was amorphous peat with H8 scale, while in Parit Sulong, Johor, at the same depth, it's also noted H8 [9]. These differences are compared to the environmental conditions of the peat origin and its essential index properties. The geography and the nature of the peat in the islands of North Borneo, separated from other continents, make it even more significant. Figure 8 shows the grid systems.

Conducted the von Post method in Klias Peninsular, and the peat soil can be classified as H5-H6, which indicates muddy to strongly muddy for the peat [10-12] the peat soil at Klias Forest Reserve can be classified as H5-H6, which, when squeezed, releases very muddy water and one-third of the peat escapes between the fingers. Logan Bunut in Sarawak recorded H2-H4 scale and was classed as a very deep peat that was quite humified under natural conditions [9]. This is in contrast to other locations in Malaysia. Amorphous peat with a H8 scale was found in Sibu, Sarawak, at a depth of 1.1–1.5 m.



(a) (b)

Fig. 7. Von Post classification of Klias peat soil. Squeezing palm produces dark-coloured water (a). Palm squeeze results with H5, (b) little decomposed peat

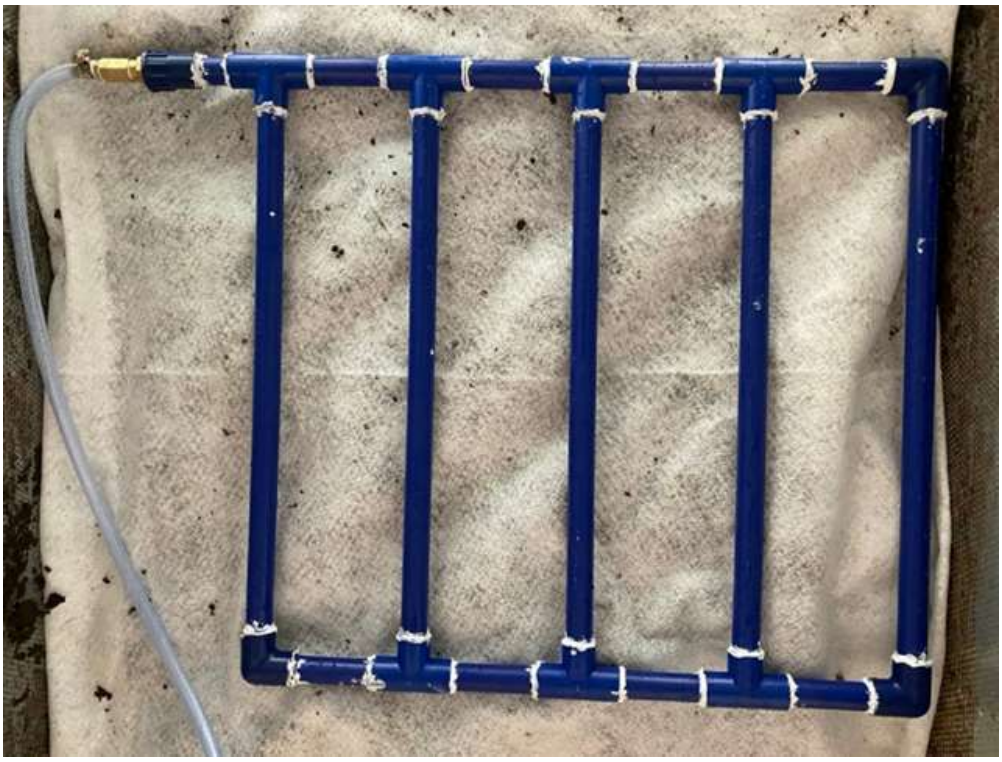

Fig. 8. The model of the pipe grid system

Table 1
Index properties of peat soil in Klias, Beaufort, Sabah

Degree of humification	Liquid limit, LL (%)	Moisture content, W (%)	Specific gravity (Gs)	Acidity (pH)	Organic content (%)	Fiber content (%)
H4 (Hemic)	168	687.03%	1.65	3.25	98.94	66.41

Peninsular Malaysia, West Malaysia (Sabah, Sarawak), and Indonesia have different peat indices with varying properties. In the land of Borneo, previous research has revealed that the natural water content of peat in that area typically ranges from 200% to 986%. As mentioned, Malaysian peat soil's water-holding range can reach 96 to 2200 per cent [13]. However, recent data collected has shown that this range has decreased to 230% due to the effects of climate change [12]. The samples were obtained during the summer season and were subsequently dried. The climate of a region largely influences the amount of moisture in peat soil. Higher rainfall and humidity in an area usually result in higher moisture levels in the peat soil, while drier regions may have lower moisture levels. Temperature changes, precipitation, and rain diffusion are among the key factors that affect the degree of soil saturation. These changes can cause variations in the formation of water tables, which may be greater or lesser than the actual water table due to the effects of climate change on soil saturation. The pH range for East and West Malaysia falls within the range of pH 3-5. Based on the data presented in the table, a conclusion can be drawn that a higher pH corresponds to a greater decomposition rate, as noted by [14]. This relationship is consistent with the observation that higher organic content leads to acidity. For instance, the author's data indicates a pH value of 3.25 and an organic content of 98.94%. Similarly, in the conditions of Sarawak state, Mohamed *et al.,* [15] found that when the pH ranged from 3.3 to 3.9, the organic content was around 95%.

Conversely, other regions in Borneo, such as Indonesia, indicate that an organic content of approximately 77.4% to 80.99% corresponds to a pH range of 3.16 to 3.7. The decrease in organic content while maintaining an acidic pH range in Indonesian peat soils could be attributed to several factors related to environmental conditions, land use practices, and regional variations. Different

peatlands have varying initial organic content and types of organic materials. The composition of organic matter can affect how quickly it decomposes. If the peatland contains more labile organic materials that are easily decomposed, it might experience a decrease in organic content more rapidly.

The study encompasses three different situational scenarios. the embankment load model is taken from clay soil. The first scenario involves applying a 5kg load to the embankment, with a sample of pre-existing peat soil placed underneath it. This scenario is conducted in a neutral wetland state without introducing any variable factors. The objective is to observe the behaviour and response of the embankment and peat soil under these specific conditions. The movement of soil settlement is considered and recorded every 2 days. On the third day, water is introduced into the simulation model at water levels of 50mm and 100mm below the peat soil layer. This situation is created with the assumption that water presence replicates rainy conditions, causing water accumulation in the area. At a water level of 100mm, this is deemed the worst-case scenario, representing a situation where the embankment could potentially be flooded. Dial gauge readings for soil settlement are read at time intervals as stipulated in the table 2.

Subsequently, in the following week, the second condition is established, where a gasless pipe grid system is placed beneath the embankment. The same situation as described earlier is reiterated, and settlement readings will be taken according to the predefined time interval. In due time, the third scenario unfolds. The intended scenario involves a grid system along with gas pressure being placed beneath the embankment. The researcher conducts this simulation due to the assumption that gas, being generally lightweight, could create voids within pipes, generating an upward force. Tables 2 shows the tabulation of peat soil settlement in millimetre (mm) versus time (t) without the grid system (WGS) and with the grid system and pressurised 0 PSI, 3PSI, 5PSI, 7 PSI, 9PSI respectively. Table 2 shows the settlement results of peat without a grid system. The results show the variables presented data in the table 2 including time and settlement. These data are used to identify trends and patterns of settlement over time. The data visualized in Figures 9 to 14 in terms of the relationships between time and settlements.

This could distribute the load of the raised embankment, thereby reducing peat soil settlement. Initial readings are recorded over a 48-hour period, followed by the introduction of water as in the first and second scenario simulations. The variable for the third scenario is the applied gas pressure. Air compared pressure values of 0 psi, 3 psi, 5 psi,7psi and 9 psi are applied to the grid pipe. An air compressor is employed to facilitate the distribution of compressed gas, and a digital pressure gauge is used for gas measurement. Settlement readings will be captured at each gas exchange. Table 2 shows the tabulation of peat soil settlement (mm) movement versus time (t) without grid system (WGS).

Table 2
Tabulation of peat soil settlement (mm) movement versus time (*t*) without grid system (WGS)

Day	Minute (*t*)	Water level	Settlement (mm)			
			A1	A2	A3	A4
	0	no water	0	0.47	1.81	1.05
	1		1.82	0.94	2.43	1.82
	3		2.31	2.45	2.43	2.54
	7	(0mm)	2.83	2.54	2.75	2.54
	9		3.54	2.74	3.01	3.11
	15		3.82	3.17	3.57	4.15
	30		4.24	3.81	4.11	4.78
	45		4.42	4.41	4.5	5.11
	60		5.6	4.45	4.71	5.99
	120(2 hours)		5.64	5.67	8.14	9.15
	240 (4hours)		8.67	9.59	14.01	11.74
day 2	24 hr		13.45	12.89	14.4	12.55
day 3	24 hr	water level change (50mm)	14.6	14.1	15.01	13.38
day 4	24 hr		15.2	15.6	15.89	14.44
day 5	24 hr	water level change (100mm)	16.7	16.9	17.22	15.87
day 6	24 hr		17.01	17.4	18.01	17.11
day 7	24 hr		17.59	17.99	18.78	17.98

The diagram displayed in Figures 9 to 14 provides a visual representation of the settlement pattern of an embankment upon the application of a 5 kg load. When a load is placed on peat soil, an immediate elastic deformation occurs, which is reversible in this regard. That means the soil will regain its original shape once the load is removed. It is important to note that peat soil is significantly different from mineral soil as it is highly organic and possesses a high degree of compressibility.

In Figure 6, it can be observed that the soil's response is depicted when a load is applied on an empty embankment without the presence of a grid system. In this case, the embankment is solely separated by a geotextile layer. Based on the analysis it is evident that the distance of soil deposition undergoes a significant shift within 24 hours. Research conducted by Sa'don *et al.,* [16] has highlighted that the primary consolidation of fibrous peat occurs rapidly. Rapid settlement occurred in this study is parallel with the concepts emphasised [16]. As can be seen in Figure 9 the maximum settlement displacement for 7 days without a grid system (WGS) the settlement pattern shows rapid decrement curves within 24 hours when loaded. The curves in downward mode represent the alternator's settlement behaviour during the loading phase and sustained periods of the settlement condition after 24 hours loading phase. In overall, Figures 9 to 14 show similar rapid settlement behaviours which are observed similar to the idea presented by Kazemian *et al.,* [17] where the rearrangements of the soil structure are already in the initial phase of loading for secondary and tertiary settlements of highly compressible soils.

By and large, the settlement behaviour shows a significant result compared to Figure 9 without a grid system to the applied grid system with pressures in Figures 10 to 14. The settlement shows an encouraging result where peat settlement can be improved with pressurised grid systems compared to the settlement without grid systems. This shows the invigorate step with the grid application. The pressurized grid system generates uplift forces that improve the settlement behaviour of peat soil. The physical law of buoyancy seen is buoyed up by a force equal to the weight of the embankment of the peat displaced by the load. This settlement displacement on floatation systems is modelled using the Archimedes principle. In this study, the buoyant force is produced by pressurized grid systems. The principles of this pressurized grid system utilized its buoyant forces in line with the

study carried out by Brandl [18] where settlement and buoyancy behaviour were used as an alternative ground improvement method to resolve soft ground problems.

Presently, a pipe grid system without gas is installed beneath the embankment to visualise the difference in settlement. Overall, this will result in a significant reduction of almost 70% in settlement compared with WGS and GS-9PSI. Lat *et al.,* [19] presented that improving peat compression and increasing the bearing capacity can be achieved with the embankment load as preloading. The method applied in this study aligns with Waruwu *et al.,* [20]. This shows the method applied is acceptable. In Figure 7, the data reveals a distinct pattern of settlement displacement over 24 hours. Upon observation, it is noteworthy that there is a significant and swift displacement of settlement at the maximum of 12.2mm for the location identified as A3. Furthermore, this is closely followed by A4, which has a displacement of 10.69mm. This immediate displacement gradually decelerates beyond the initial 24-hour timeframe. Upon release of the applied load and embankment self-load, A1 and A2 display modest displacements of 8.67mm and 9.12mm, respectively. Intriguingly, a contrasting trend emerges post the initial 24-hour mark, as a rapid settlement becomes more pronounced across all denoted points. However, as the observation period extends to five days, a notable deceleration in displacement rates is observed. This is evident in the decreasing displacement magnitudes for all the denoted locations: A1 with 8.03mm, A2 with 7.31mm, A3 with 3.21mm, and A4 with 4.31mm. During days 6 to 7, the settlement pattern slowed, with A1 settling 0.5mm, A2 settling 0.59mm, A3 settling 0.77mm, and A4 settling 0.87mm.

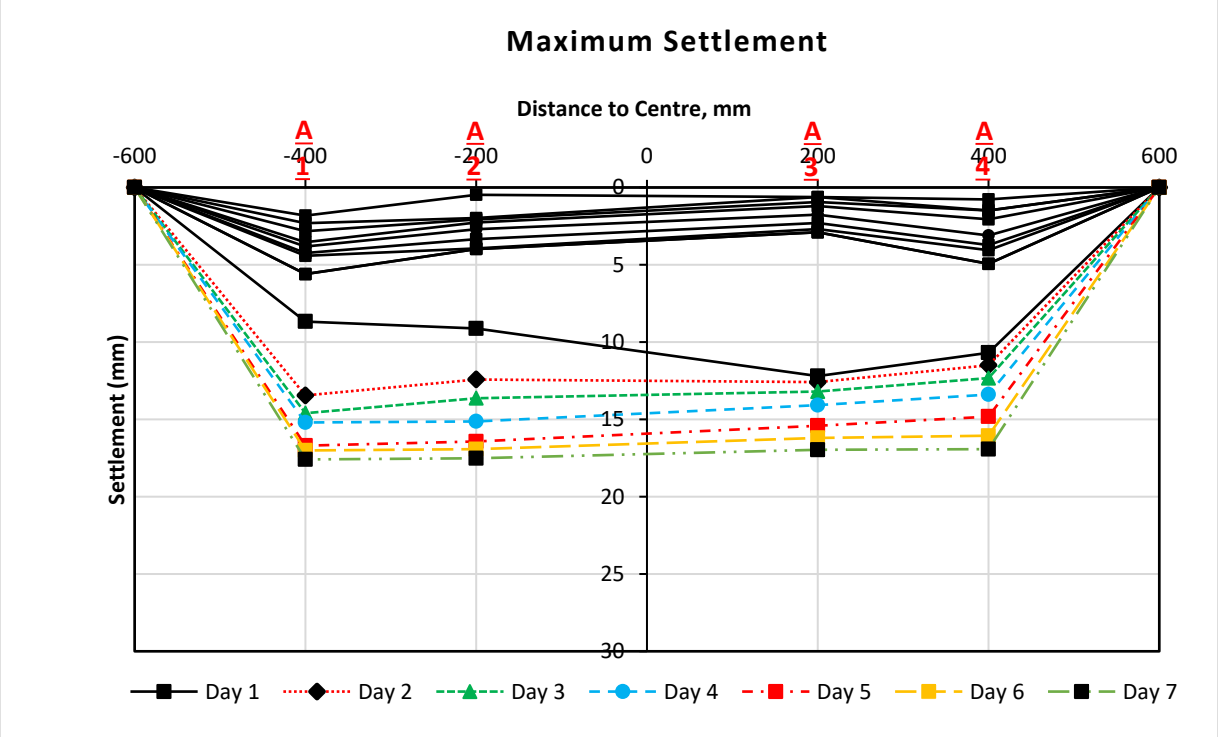

Fig. 9. The maximum settlement for 7 days without grid system (WGS)

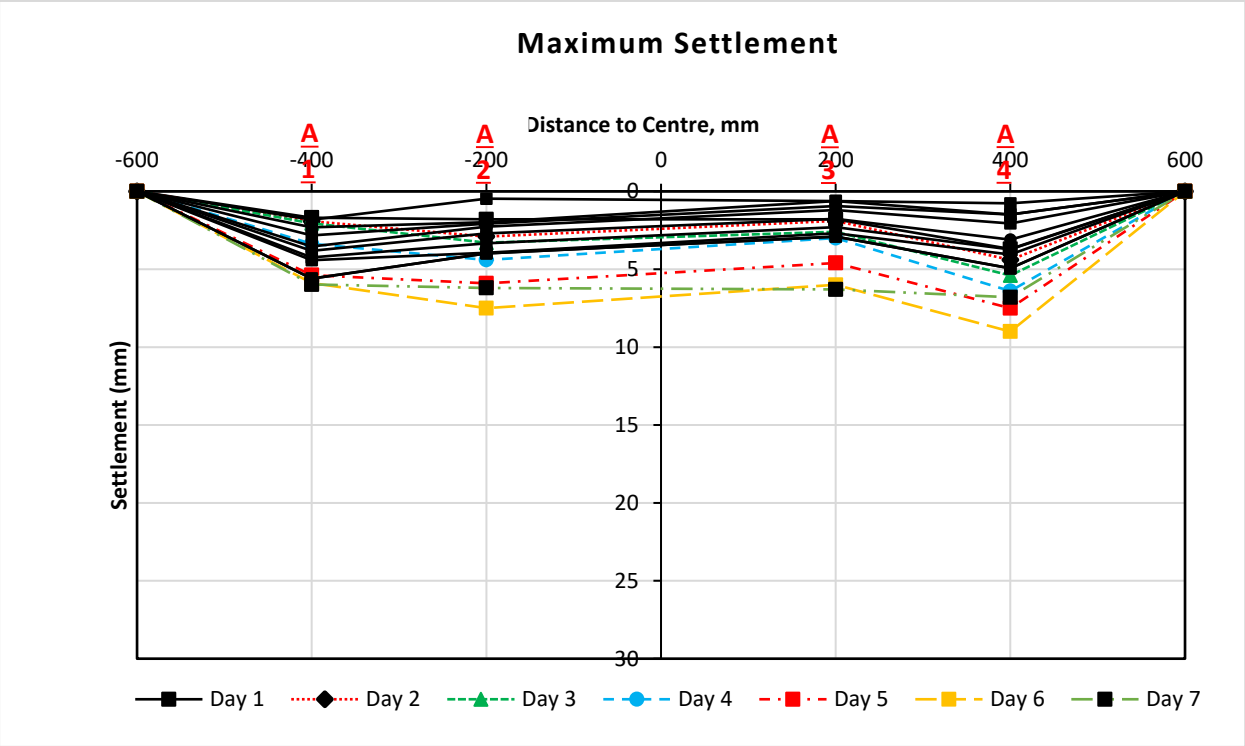

Fig. 10. The maximum settlement in 7 days with pipe grid system using 0 psi gas pressure

Upon introducing the grid pipe system to the embankment, there is a noticeable change in the deformation pattern. This can be seen in Figure 7, which displays settlement movement over a period of 7 days. It has been concluded that when the pipe grid system is laid beneath the embankment, settlement significantly decreases to 1.69mm at mark A1 over the course of 24 periods. This is followed by A2 and A3, which have a settlement of 1.8mm respectively. It is worth noting that the maximum settlement is observed at mark A3, which is at 3.7mm. These observations indicate that the grid pipe system has a positive impact on the embankment and its stability, lowering the amount of settlement significantly. In Waruwu *et al.,* [20] study, a grid concept layer system was implemented to address settlement issues, resulting in a significant increase in subgrade and shear modulus. The researchers found that the introduction of more layers played a crucial role in achieving a reduction in settlement. This finding highlights the potential effectiveness of the grid concept layer system in addressing settlement-related concerns and improving subgrade and shear modulus.

By using the concept of floating road embankment. The model prototype testing with pressurized compressed air is inserted into the grid pipe system. This result shows that the air entering the pipe cavities initiates a buoyant effect, effectively mitigating the settlement that would otherwise occur. This intriguing phenomenon aligns with the hypothesis of the floating road concept, derived from the principles of Buoyancy or upthrust. In essence, this concept has successfully harnessed the force of buoyancy to transform the grid pipe arrangement, which is structured in a grid pattern and features hollow spaces. These spaces adeptly capture air, and the buoyant force commences a gradual ascent, counteracting the gravitational pull, thereby facilitating the lifting of an object. In more comprehensive detail, introducing compared air at a pressure of 0psi, 3psi, 5psi, 7psi and 9 psi instigates a phenomenon known as buoyancy. This is a fundamental principle in fluid dynamics, where a fluid (in this case, the gas) exerts an upward force on an immersed object. This buoyant force is directly proportional to the displaced volume of the fluid and is capable of counteracting the force of gravity. In this study, the loading stage was applied in phases with 5 kg loads as suggested by Waruwu *et al.,* [20] where the good stage load is obtained in three stages with the addition of the

embankment load of 3.02 kPa or 1/3 of the total load every 2 days or 1/3 of the total duration of the load.

In the context of the grid pipe system, as gas permeates the hollow cavities within the pipes, it displaces the air present in those spaces. The gas, being lighter than the surrounding material, imparts an upward force on the structure. This force gradually becomes stronger as more gas fills the voids, leading to a situation where the cumulative upward force begins to oppose the downward force due to the weight of the embankment or load. The grid pipe system, incorporating gas and its buoyant force, transforms into a mechanism akin to a floating platform. The result of Figure 8 shows the settlement with the grid system and pressure (344/psi) in the last 24 hours. The maximum settlement is at mark A3 with 1.83mm, A4= 1.1mm continuer with smaller reaction settlement A2=0.17mm, A4=0.19mm. After 7 days, the result at mark A3 is 3.3mm, A4=3mm, A2=3mm, and A1=0.89mm. Compared with the model with a grid system without air pressure. The results indicate that the presence of gas within the pipe grid system can reduce settlements by 50%.

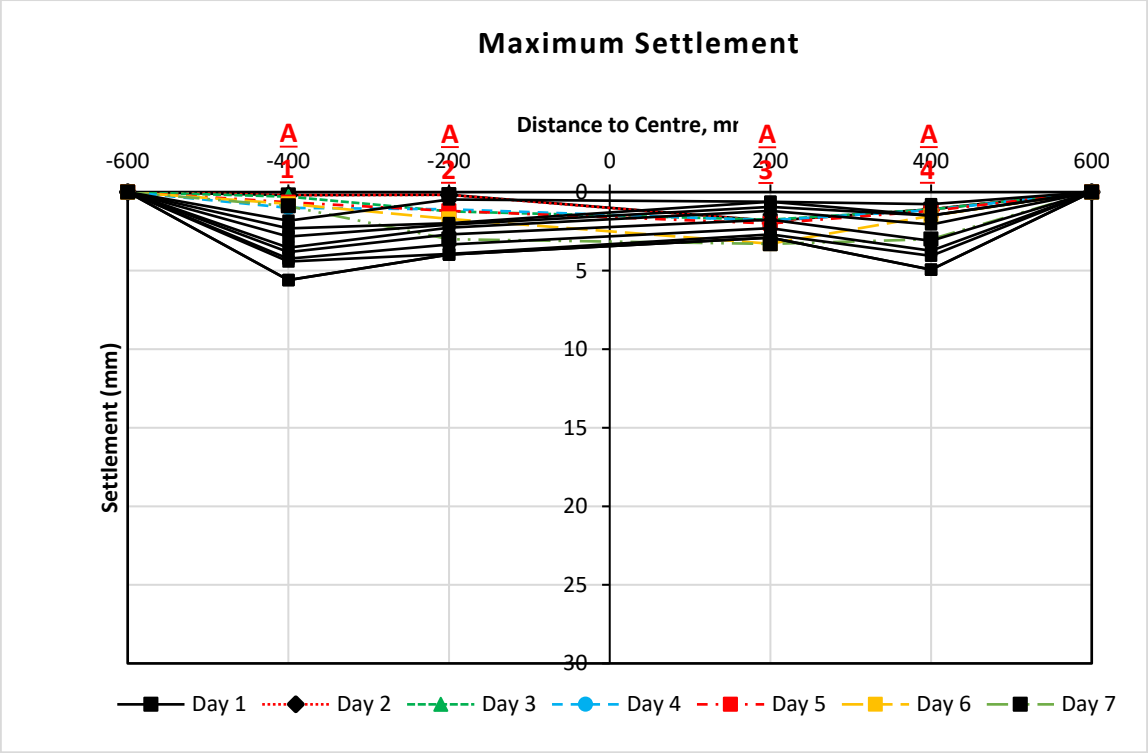

Fig. 11. The maximum settlement in 7 days with pipe grid system using 3 psi gas pressure

To make it more detailed, the pressure of compressed air injected into the grid system is changed to 5psi and the result is shown in Figure 7. In the latest round of testing, the experiment observed a decrease in maximum settlement reaction compared to the previous test results. Specifically, at marks A1, A3, A4, and A2, the values were 0.87mm, 0.75mm, 0.67mm, and 0.19mm, respectively. The installation of grid pipe as reinforcement on the peat layer can reduce settlement caused by embankment load. The experiment repeated the test using air pressure levels of 7psi and 9psi, and measured settlement movements after 7 days for each pressure level. This experiment's findings are presented in Figure 6 to 9. Interestingly, this experiment noted that the grid pipe under the embankment experienced a lighter settlement reduction as the air pressure increased. Figure 8 shows the maximum settlement reaction after 7 days is A1 and A2 is 0.84mm, A3=0.75mm, A2=0.67mm. Meanwhile, Figure 9 is the reaction of maximum settlement for the experiment pipe

grid system using 9psi compared to air. The reaction settlement at marks A2, A3 and A4 is 0.68mm, A1=0.7mm.

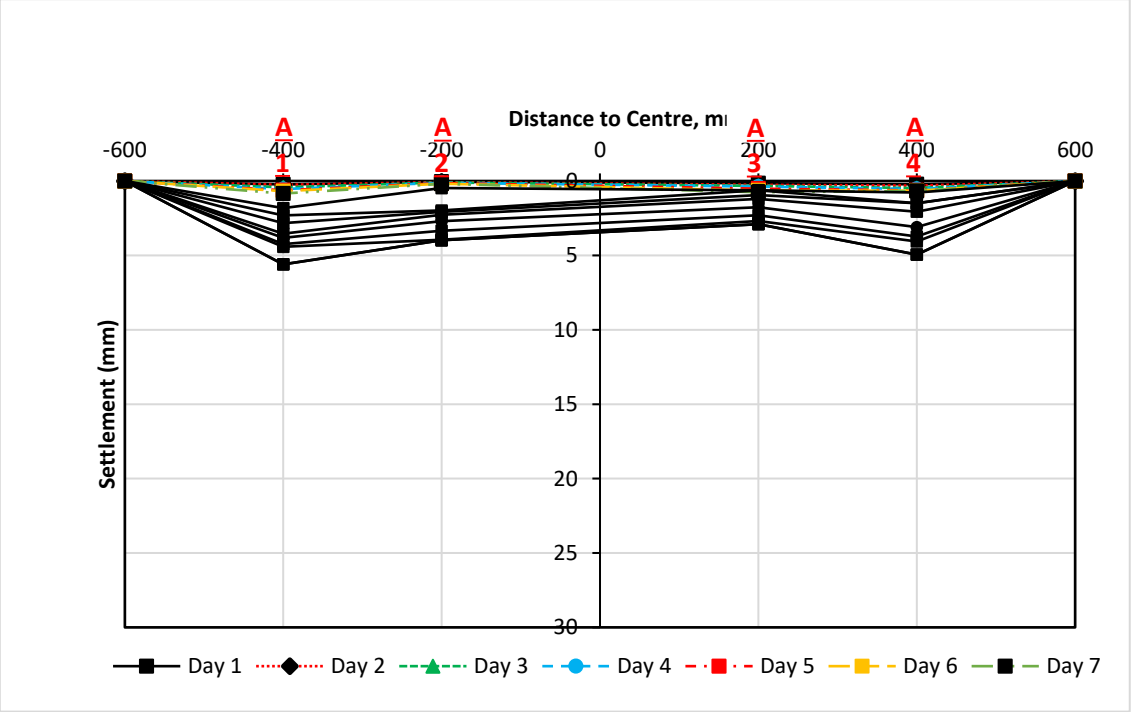

Fig. 12. The maximum settlement in 7 days with pipe grid system using 5 psi gas pressure

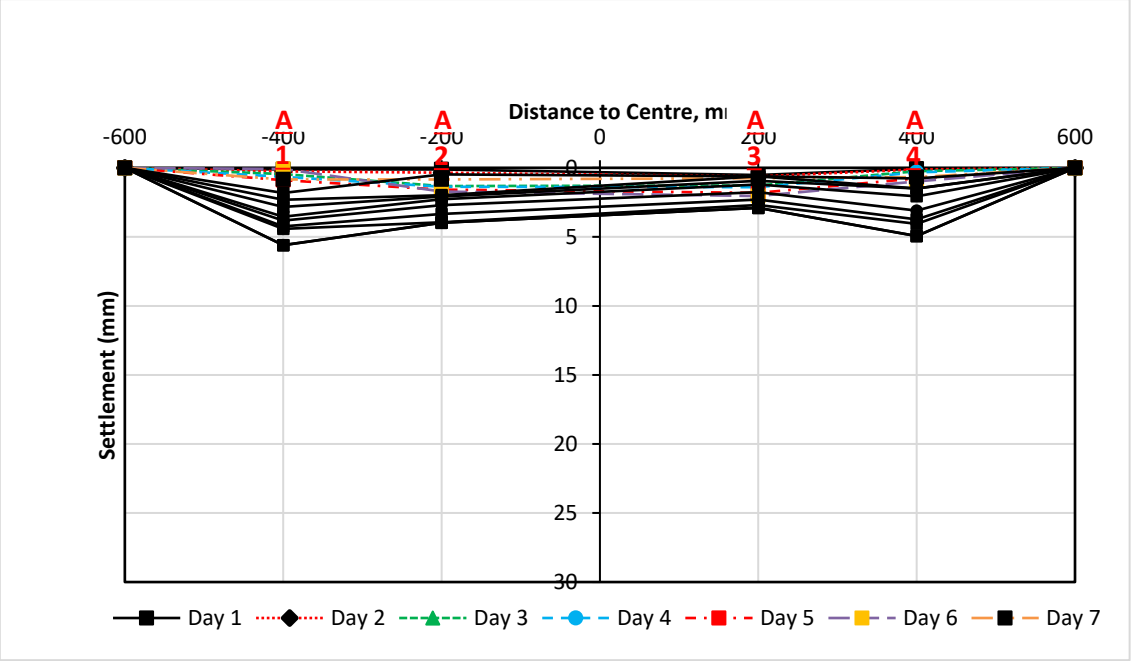

Fig. 13. The maximum settlement in 7 days with pipe grid system using 7 psi gas pressure

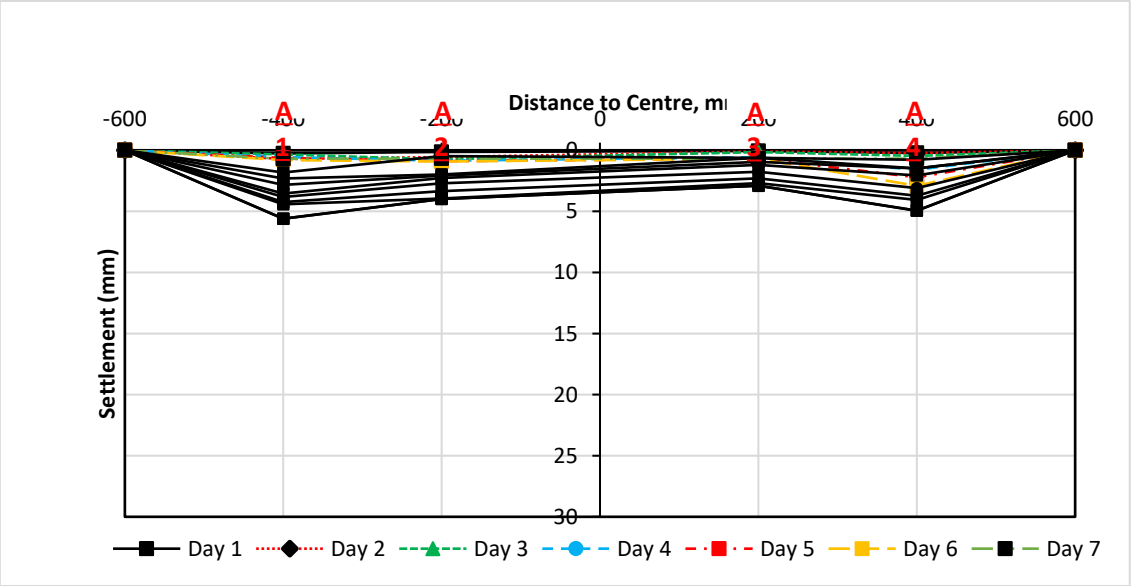

Fig. 14. The maximum settlement in 7 days with pipe grid system using 9 psi gas pressure

4. Conclusions

The purpose of the study is to examine the ability of compressed and light air to provide space to act as a buoyant force to allow buoyancy to be utilized because it is known that one of the characteristics of peat soil is very compressible and has very high-water content. Based on the physical model simulation made, the objective of reducing settlement was successful. And the hypothesis of making it floating with the presence of buoyancy was also successful. There are several shortcomings that are expected to be identified and improved. The primary objective of this study was to investigate the behaviour of peat soil under various load conditions. A physical model was constructed in the laboratory, simulating a pipe grid system beneath embankments on peat foundations. The ultimate goal was to enhance our understanding and predictability of peat soil responses to different load scenarios. Our findings indicate that the use of a pipe grid system can produce a 43% reduction of settlement and the additional injection of air (5psi-9psi) can significantly reduce settlement between 85%-89% respectively. This aligns with previous studies which demonstrated the effectiveness of using a bamboo grid system in soil reinforcement [19,21]. These studies showed that the use of a bamboo grid increased the bearing capacity of peat soil and reduced settlement [19,20]. Furthermore, the more layers of bamboo grid reinforcement used, the greater the bearing capacity of the foundation on peat soil.

This study presents a comparative analysis of five distinct methodologies employed to measure settlement over time, including WGS (without grids system) [19] Asaoka's method, GS-0 (grid pipe system with 0 psi), and GS-9 (grid pipe system with 9psi). The results in Figure 9 shows a nearly linear increase in settlement over time for the GS-9 method, this results around in 1 week indicating a consistent rate of settlement. The hyperbolic method was highlighted as an important tool in estimating settlement over time. It was used in Waruwu *et al.,* [20] study to estimate the settlement of peat soil when subjected to embankment load and it specifically focuses on scenarios where bamboo grids are employed as reinforcement, and to determine the compressibility of peat soil where settlement prediction below embankment by comparing two methods hyperbolic and Aasoka method [19]. Both studies can be used as a reference in finding load stages in the application of embankment on peat soil.

Our findings emphasize the effectiveness of using reinforcement methods, such as a pipe grid system and a bamboo grid. Within a week, as indicated by the red line on the graph, the pipe grid system was found to be more effective in reducing settlement. This supports the theory that using light air can distribute and lighten the load downwards However, it's important to note the limitations of our study, particularly concerning the pipe grid system. Future research could further investigate research could investigate alternative materials or methods for load distribution that are less prone to leakage and easier to maintain. These findings have important implications for both future research and practical applications in geotechnical engineering. In conclusion, this study presents a comprehensive comparison of settlements and stresses in peat soil using a pipe grid system. Our findings reveal that the pipe grid system significantly improves the performance of the embankment by reducing both the settlement and vertical stress of the soil. On the second day of the experiment, the grid reduced the settlement by 77% and the vertical stress by 76% compared to the case without the grid. By the seventh day, the grid continued to demonstrate its effectiveness, reducing the settlement by 43% and the vertical stress by 42%. These results underscore the potential of the pipe grid system as an effective solution for managing settlement and stress in peat soil, particularly in the context of embankment construction.

Acknowledgement

I would like to express my heartfelt gratitude to all those who have supported me throughout the completion of this research project, titled "Application of Helium Gas Tube for Road Embankment Design on Peat Soil" (SGA0090-2019), conducted under the SKIM Geran Acculturation program at Universiti Malaysia Sabah.

References

[1] Davies, Jon, Usha Mathhew, Sarala Aikanathan, Y. C. Nyon, and Gabriel Chong. "A Quick Scan of Peatlands." *Wetland International Malaysia* 1 (2010): 1-80.

[2] Khing, Vincent Tang Chok. "Peat and organic soils challenges in road construction in Sarawak: JKR Sarawak experience." In *Proceedings of the 15th International Peat Congress*, pp. 613-618. 2016.

[3] Huat, Bujang BK, Sina Kazemian, Arun Prasad, and Maassoumeh Barghchi. "State of an art review of peat: General perspective." *International Journal of the Physical Sciences* 6, no. 8 (2011): 1988-1996.

[4] Hassan, As'ari, Frederick Haili Teck , Ngab Dollah Salam , Elizabeth Malangkig , Roslan Mahali, Noranizam Mohd Sahil, Wan Mohd Rusydan Wan Ibrahim. "Characterization And Classification Of Peat Soils In Malaysia." *Comsssem, 15th International Peat Congress*. 2016.

[5] bin Zainorabidin, Adnan, Nursyahidah binti Saedon, Ismail bin Bakar, and Nurul Farhana bt Mohd Seth. "An investigation of soil volume changes at four dimensional points of peat soil sample in Parit Nipah and Pontian." *Applied Mechanics and Materials* 773 (2015): 1491-1496. https://doi.org/10.4028/www.scientific.net/AMM.773-774.1491

[6] Zainorabidin, Adnan, and Habib Musa Mohamad. "A geotechnical exploration of Sabah peat soil: Engineering classifications and field surveys." *Electronic Journal of Geotechnical Engineering* 21, no. 20 (2016): 6671-6687.

[7] Francescutto, Alberto. "Intact stability criteria of ships–Past, present and future." *Ocean Engineering* 120 (2016): 312-317. https://doi.org/10.1016/j.oceaneng.2016.02.030

[8] Zainorabidin, Adnan, and Habib Musa Mohamad. "Engineering properties of integrated tropical peat soil in Malaysia." *Electronic Journal of Geotechnical Engineering* 22, no. 02 (2017): 457-466.

[9] Melling, Lulie, Lah Jau Uyo, Kah Joo Goh, Hatano Ryusuke, and Mitsuru Osaki. "FINAL REPORT: SOILS OF LOAGAN BUNUT NATIONAL PARK, SARAWAK, MALAYSIA." (2006).

[10] Teong, I. T., N. L. L. Felix, S. Mohd, and A. Sulaeman. "Characterization of soil organic matter in peat soil with different humification levels using FTIR." In *IOP Conference Series: Materials Science and Engineering*, vol. 136, no. 1, p. 012010. IOP Publishing, 2016. https://doi.org/10.1088/1757-899X/136/1/012010

[11] Tawan, C. S., I. B. Ipor, and W. H. Wan Sulaiman. "Floral diversity of the peat swamp forests of Sarawak." *Restoration of tropical peatlands* (2008): 39.

[12] Construction Research Institute Of Malaysia (Cream), Guidelines For Construction On Peat And Organic Soils In Malaysia , October 2015.

[13] Afip, I. A., and K. Jusoff. "Properties of a tropical sapric peat soil in Sarawak." (2019): 1-12. https://doi.org/10.1155/2019/3909032
[14] Journal of Soil Science, 23, 1-12.
[15] Mohamed, Murtedza, E. Padmanabhan, B. L. H. Mei, and W. B. Siong. "The peat soils of Sarawak." *STRAPEAT Status Report. Universiti Malaysia Sarawak, Malaysia* (2002).
[16] Sa'don, N. M., AR Abdul Karim, W. Jaol, and WH Wan Lili. "Sarawak peat characteristics and heat treatment." *Journal of Civil Engineering, Science and Technology* 5, no. 3 (2014): 6-12. https://doi.org/10.33736/jcest.139.2014
[17] Kazemian, Sina, Afshin Asadi, Bujang BK Huat, Arun Prasad, and Irman BA Rahim. "Settlement problems in peat due to their high compressibility and possible solution using cement columns." In *Forensic Engineering 2009: Pathology of the Built Environment*, pp. 255-264. 2010. https://doi.org/10.1061/41082(362)26
[18] Brandl, H. "Creeping (secondary/tertiary settlements) of highly compressible soils and sludge." *Građevinski materijali i konstrukcije* 61, no. 1 (2018): 27-36. https://doi.org/10.5937/GRMK1801027B
[19] Lat, D. C., IB Mohamed Jais, N. Ali, WMI Wan Kamaruddin, and NHW Nor Zarin. "Consolidation settlement and buoyancy behaviour for different thickness of polyurethane foam as a ground improvement." In *Journal of Physics: Conference Series*, vol. 1349, no. 1, p. 012110. IOP Publishing, 2019. https://doi.org/10.1088/1742-6596/1349/1/012110
[20] Waruwu, Aazokhi, Husni Halim, Thamrin Nasution, and Yudha Hanova. "Bamboo grid reinforcement on peat soil under repeated loading." *Journal of Engineeering and Applied Sciences* 13, no. 8 (2018): 2190-2196.
[21] Waruwu, A. Maulana, and H. Halim. "Settlement estimation of peat reinforced with bamboo grid under embankment." *International Review of Civil Engineering (I. RE. CE)* 8, no. 6 (2017): 299-306. https://doi.org/10.15866/irece.v8i6.13130